PC-P18KAKL.TH-T
PC-P24KAKL.TH-T

Unit : mm

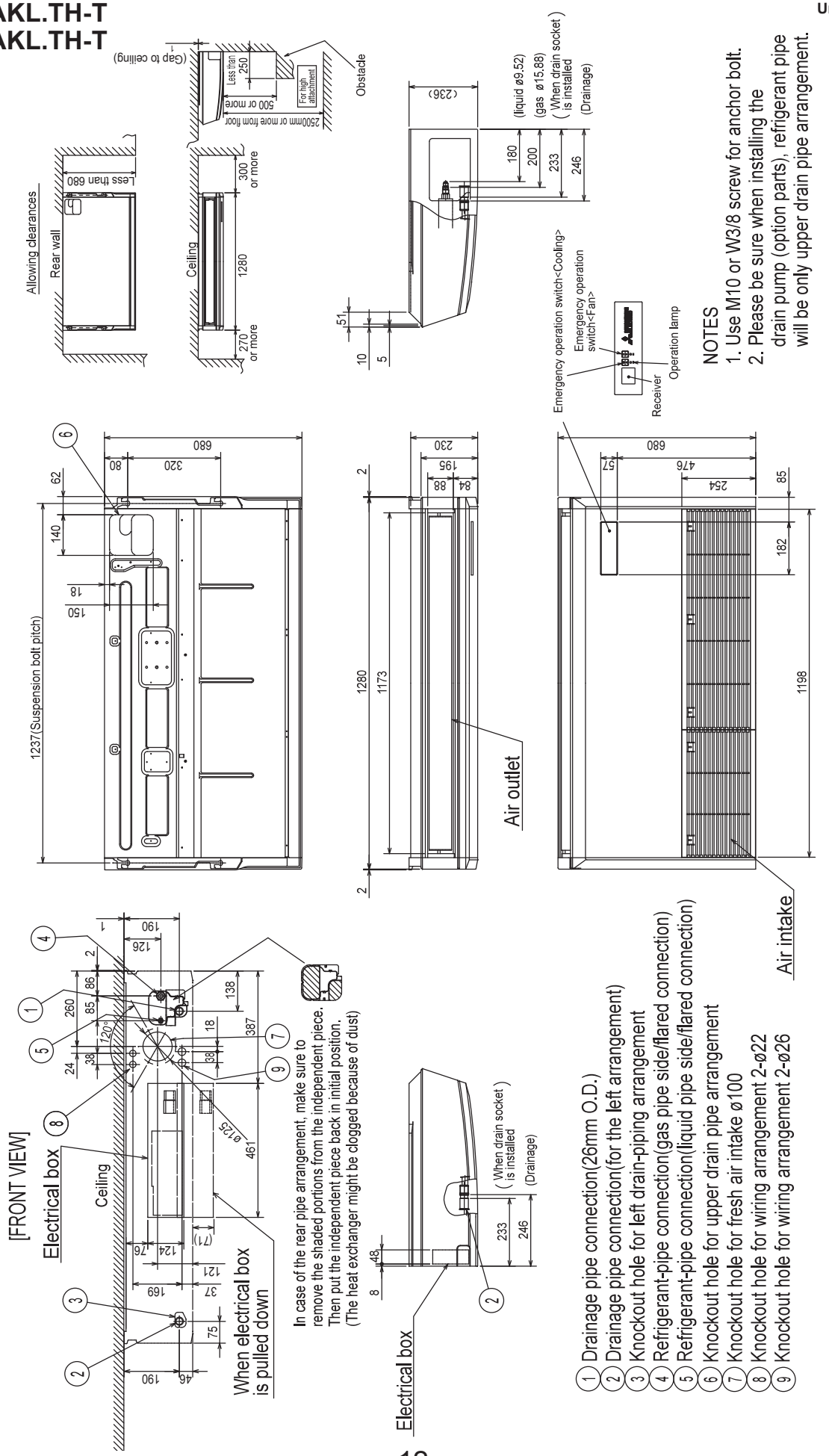

PC-P30KAKL.TH-T
PC-P36KAKL.TH-T
PC-P42KAKL.TH-T
PC-P48KAKL.TH-T

Unit : mm

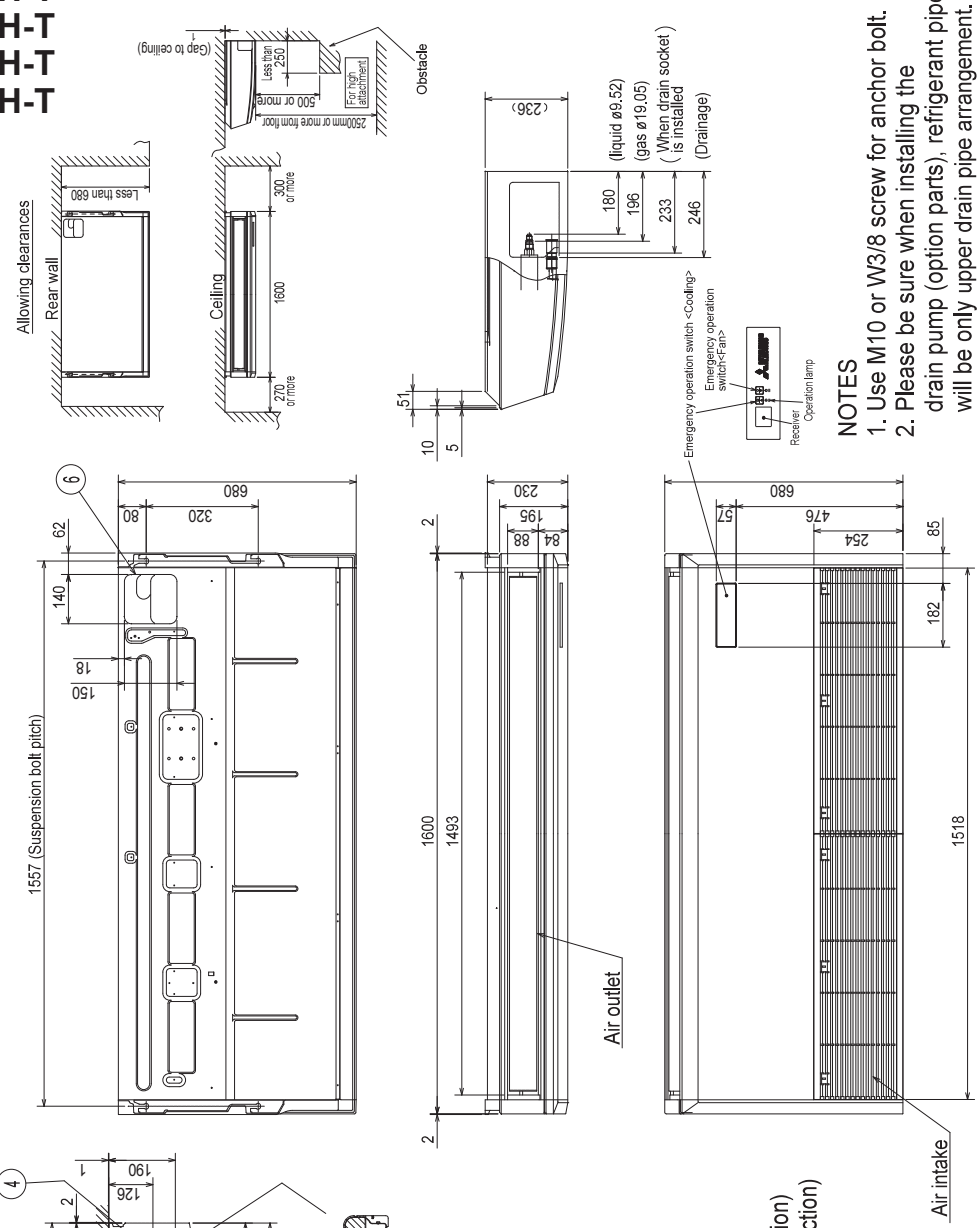

NOTES
1. Use M10 or W3/8 screw for anchor bolt.
2. Please be sure when installing the drain pump (option parts), refrigerant pipe will be only upper drain pipe arrangement.

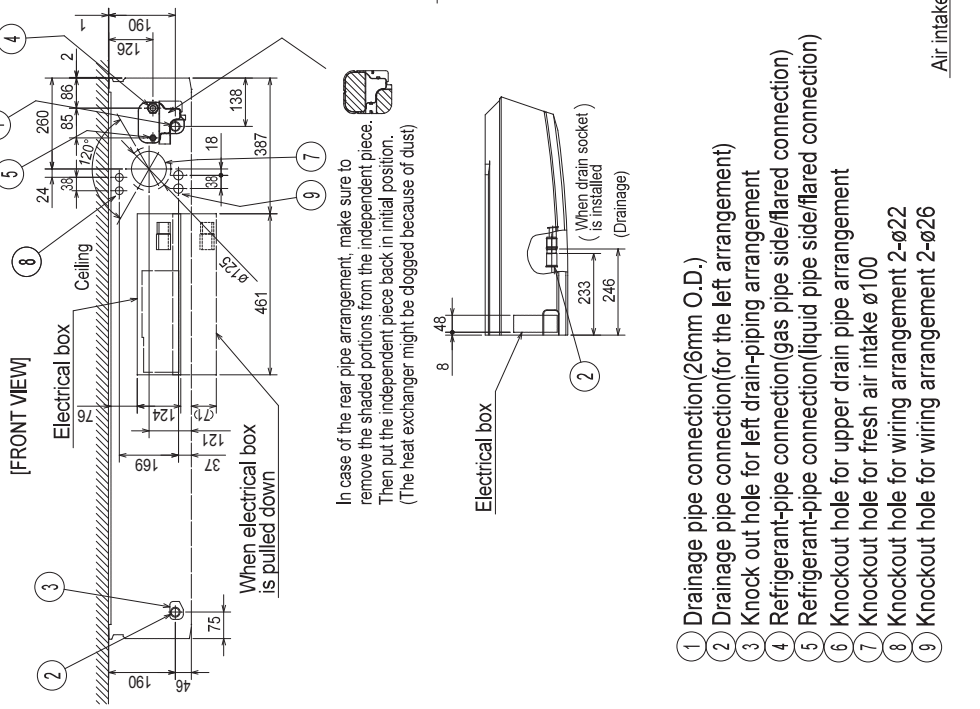

① Drainage pipe connection(26mm O.D.)
② Drainage pipe connection(for the left arrangement)
③ Knock out hole for left drain-piping arrangement
④ Refrigerant-pipe connection(gas pipe side/flared connection)
⑤ Refrigerant-pipe connection(liquid pipe side/flared connection)
⑥ Knockout hole for upper drain pipe arrangement
⑦ Knockout hole for fresh air intake ø100
⑧ Knockout hole for wiring arrangement 2-ø22
⑨ Knockout hole for wiring arrangement 2-ø26